R.R. Moore Rotating Beam Fatigue Testing System

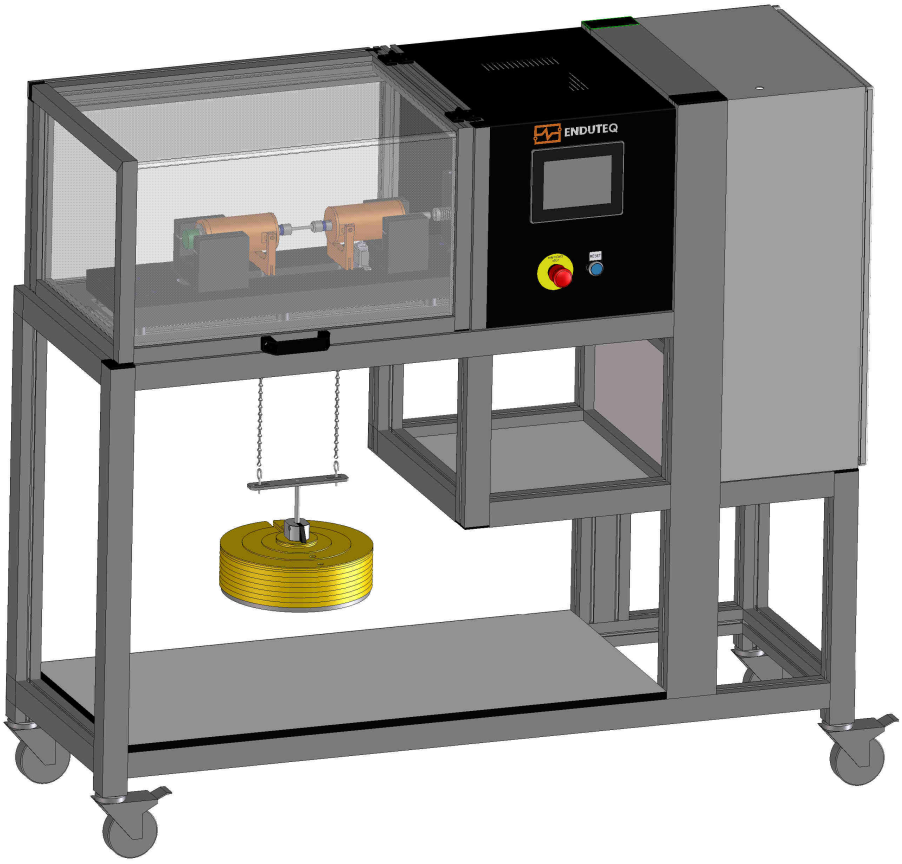

The R.R. Moore Fatigue Testing System tests specimens by rotation (tension and compression) acc to ISO 1143.

This system is designed for destructive and non- destructive testing of beams.

ENDUTEQ
ENDUTEQ develops automatic Test- and Measuring systems to measure movement (position, speed and acceleration), force and temperature. In close cooperation we develop tailor-made solutions for every testing challenge you may have.

ENDUTEQ

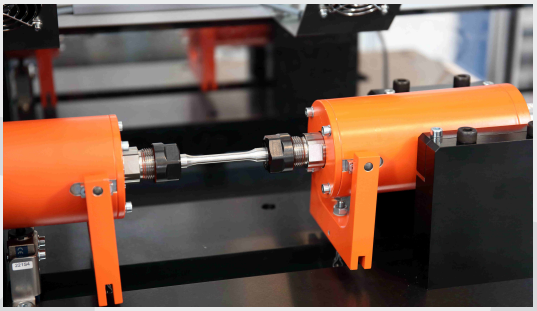

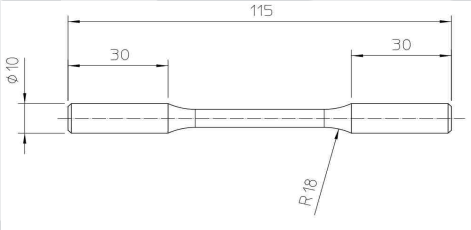

Straight shank specimen

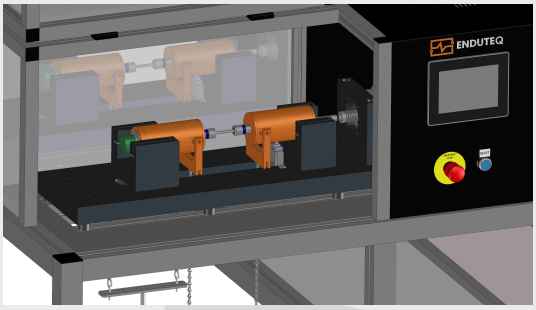

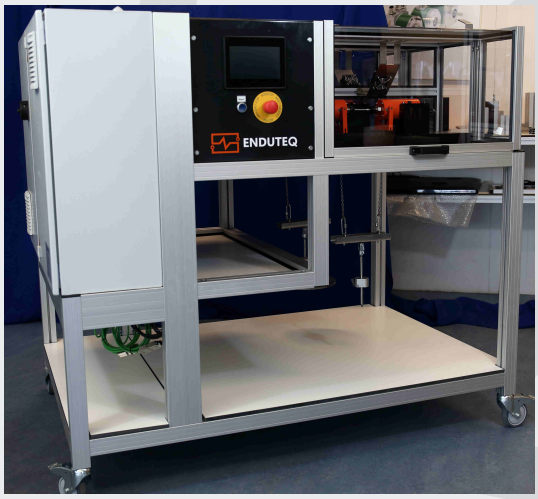

R.R. Moore Rotating Beam Fatigue Testing System

The R.R. Moore Fatigue Testing Systems' design is based on the rotating beam principle. The specimen functions as a simple beam symmetrically loaded at two points. When rotated one half revolution, the stresses in the material originally below the neutral axis are reversed from tension to compression and vice versa. Upon completing the revolution, the stresses are again reversed so that during one revolution the test specimen passes through a complete cycle of flexural stress (tension and compression).

Specimen loading

The R.R. Moore Fatigue Testing System is equipped to test straight shank specimens. The standard specimen length is appr. 90 mm. Specimens 25 mm longer or 25 mm shorter can be tested.
Straight shank specimens are held in place using precision specimen collets.
Stress is applied to the specimen by direct application of deadweights to ensure precise loading.

Controller including cycle counter

Integrated variable speed control provides the R.R. Moore Fatigue Testing Systems' capability to operate at speeds from 500 RPM to 10.000 RPM. Speed control is important in testing certain materials that heat up when highly stressed, and it allows certain correlations of results between high speed tests and lower speed test.

Controller is provided with a touchpanel display showing:

- Cycle counter up to 99mil counts.
- Set speed, and actual speed.
- Set speed, can varied during startup of new test.
- Specimen data can be stored into the controller.

Data will be stored during test and after completion of test.

Specifications

Bending moment capacity	2,5 Nm to 25 Nm
Capacity increments	0,0254 Nm
Rotational speed	500 RPM to 10.000 RPM
Diameter collet clamp	Ø 10mm
Recomm. test diameter specimen	Ø 6mm to Ø 9,5mm
Load weight set	5 kg (6x)
	2 kg (2x)
	1 kg (1x)
	0,5 kg (1x)
	0,2 kg (1x)
	0,1 kg (2x)
	0,05 kg (2x)
Min effective Load Weight	5 kg
Max effective Load Weight	35 kg
Machine Weight	approx 150kg
Power requirement	400V - 3 ph / 50Hz

Options

ENDUTEQ

Mollevite 24
6931 KG, Westervoort

T. +31 (0) 26 303 15 40
I. www.enduteq.com

E. info@enduteq.com